2021

KIDNEY LOOP SYSTEMS

ONE EYE INDUSTRIES

SOLVING TOMORROW'S CHALLENGES TODAY.

ONE EYE INDUSTRIES

KIDNEY LOOP SYSTEMS

KIDNEY LOOP SYSTEMS

DESCRIPTION

OEI Kidney Loop Systems are self-contained filtration units for off-line filtration, fluid transfer of mobile or stationary equipment, and flushing of storage reservoirs. Systems are designed for fluid viscosity, temperature, mobility, and installation requirements.

Key parameters to identify when ordering;

- Stationary/Mobile
- Power Source (AC/DC)
- Voltage/Phase
- Operating Temperature
- Fluid Viscosity
- Reservoir Size
- Ambient Air Temperature
- Required Heat Rejection

2-STAGE MAGNETIC FILTRATION

Magnetic Filter Scrubber (primary filter, pump and motor protection)

Magnetic Filter Scrubbers employ a magnetic filter element in a specialty housing designed to operate with minimal flow restriction and maximum fluid dwell time (exposure of ferrous contamination to the magnetic filter element) for high-efficiency filtration.

ADD-Vantage 9000 (stainless-steel cloth element to capture uncharged non-ferrous particles)

Employs OEI's patented magnetic filter element as the initial filter and a stainless steel cloth element as a secondary filter. The magnetic filter element high holding capacity allows for extended operating life of the stainless steel cloth element which minimizes bypassing and extends service/cleaning intervals.

EFFICIENCY

Magnetic Filter Element	Ferrous Contamination	Captures ferrous wear particles down to 4 µ and below with up to 95+% efficiency.
	Non-ferrous Contamination	Non-ferrous particles are magnetically captured because of cross-contamination from static charge or embedded ferrous particles.
Stainless Steel Cloth Element Absolute Rating *Pleated, Flat Screen, Perforated*	10 µ, 25 µ, 40 µ, 150 µ	BETA 200 *Exceeds ISO 16889 Standards*
Temperature/Pressure Rating	Standard Heat	< 105° C (221° F)
	High Heat	< 226.7° C (440° F)
Flow Rate	< 100 gpm (379 L/min)	
Viscosity Rating	< 1,000 cSt	

KIDNEY LOOP SYSTEM

STANDARD FEATURES

- Pressure gauge
- Drip tray
- Positive displacement gear pump
- Electrical system
- OEI Magnetic Filter Scrubber
- OEI Add-Vantage 9000
  with replacement stainless steel cloth element
- Electric motor
- Bleed valve
- Sample port
- Kill switch
- Isolation ball valve
- Sight glass

OPTIONAL FEATURES

- Particle counter
- Additional stainless steel cloth elements
- Cover
- Lifting lugs
- Div 1, Class 1 electrical requirements
- Water absorbent filter elements
- Pneumatic pump
- Wheels

MATERIAL CONSTRUCTION

Magnetic Filter Element	Rare-earth magnets configured in a patented radial field design	
Filter Housing, End Caps, Mounts	Standard	Carbon Steel
	Non-Corrosive	Stainless Steel
Pleated, Flat Screen, or Perforated Cloth-Media Element	Stainless Steel	
Seals	Standard Temperature	Buna
	High Temperature	Viton
	Low Temperature	EDPM
Frame	» Carbon Steel	» Aluminum
Hoses	Application dependent	

INSTALLATION

Transport	» Dolly	» Mobile	» Fixed
Port Size	½” - 2”		
Fittings	» NPT » ORB » BSPP	» BSPT » JIC » Quick Coupler	
Element Clearance	Housing length + 4”		
Mount Type	Inline		

SERVICE LIFE

Magnetic Filter Element	18+ years
Stainless-steel Cloth Element	5 years

LIMITED WARRANTY

- Other components are rated for their manufacturer’s warranty and are the responsibility of the Purchaser to obtain.
- Consumables are not under warranty.

Kidney Loop System	1 year
Filter Housings and Components	1 year
Magnetic Filter Elements	3 years

MAGNETIC FILTER ELEMENT

EFFICIENCY

Ferrous Contamination Filtration	Captures ferrous wear particles down to 4 µ and below with up to 95+% efficiency.
Non-Ferrous Contamination Filtration	Non-ferrous particles are magnetically captured because of cross-contamination. Particles become statically charged from flow velocity. This charge is a principal force of particle adhesion; iron particles contaminate non-ferrous particles by adhering to their statically charged surface. Another form of cross-contamination occurs when sub-micron iron particles embed in softer, non-ferrous particles after abrasive impact.

OPERATING PARAMETERS

Pressure Rating	Standard	< 34.5 bar (500 psi)
	High Pressure	< 689.5 bar (10000 psi)
Temperature Rating	Standard	< 150° C (300° F)
	High Heat	< 300° C (600° F)
Flow Rate	Housing Dependent	
Bypass Setting	Continuous	

CLEANING

Remove the magnetic filter element from the housing, then remove the contamination with a lab cloth/ non-fiber cloth that absorbs the contamination. Save the cloth in a sample bag to send for analysis.

Use the magnetic filter element as a predictive maintenance tool by removing contamination with a lab cloth or rubber glove and depositing it into a sample jar. Send the contamination for analysis to determine the source of equipment component wear and prevent system failure.

MATERIALS

Magnetic Filter Element	Rare-earth magnets are configured in a patented radial field design
Casing	Stainless Steel

LIMITED WARRANTY

Magnetic Filter Element	3 years

SERVICE LIFE

Magnetic Filter Element	18+ years

½” OD X 12” L

SPECIFICATIONS

Holding Strength	57 ft-lb
Dirt Holding Capacity	1.8 lb-lft
Length Options	9", 12”, 24"

Radial Magnetic Fields (12")	10
Radial Magnetic Field Diameter	3"
Magnetic Surface Area (12")	68.7 in^3

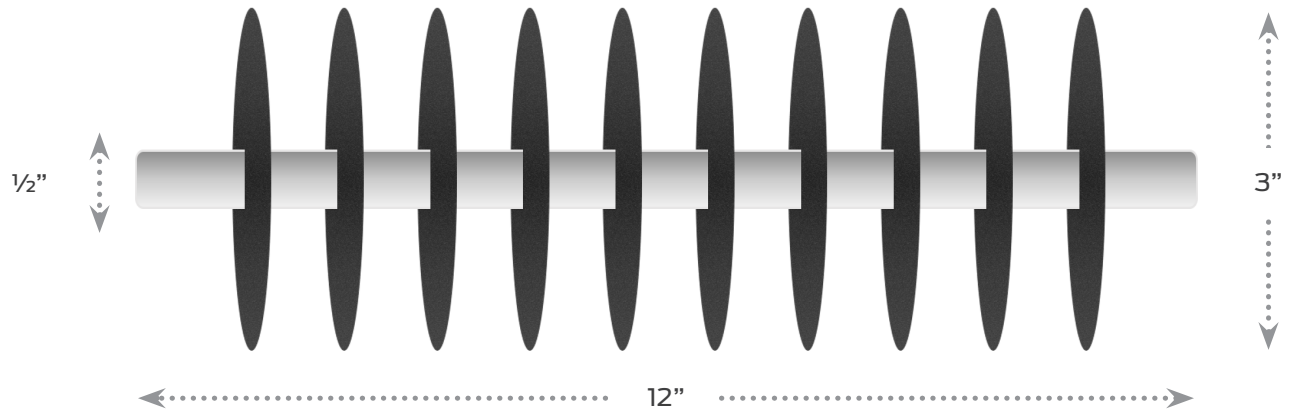

¾” OD X 12” L

SPECIFICATIONS

Holding Strength	123 ft-lb
Dirt Holding Capacity	3.0 lb-lft
Length Options	9", 12”, 24", 36"

Radial Magnetic Fields (12")	10
Radial Magnetic Field Diameter	4”
Magnetic Surface Area (12")	125.2 in^3

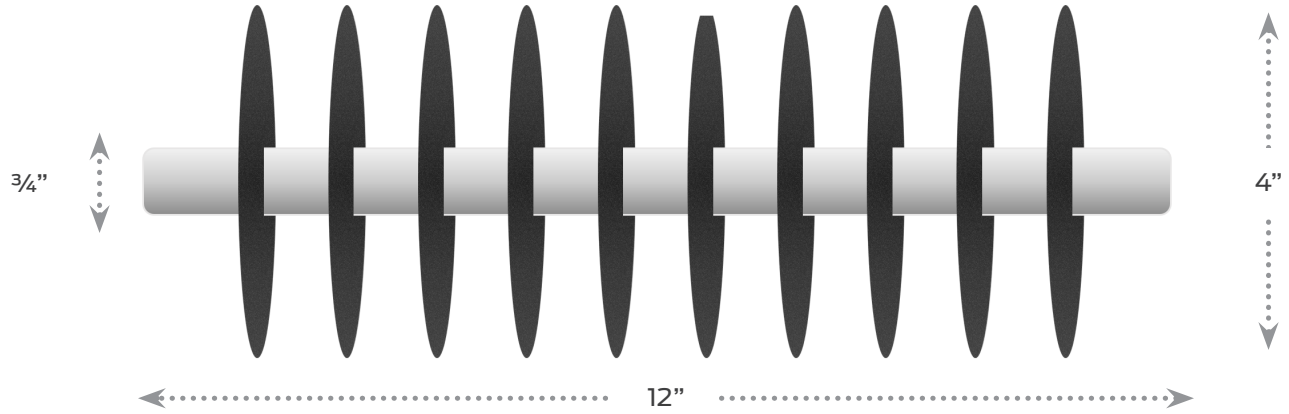

1” OD X 12” L

SPECIFICATIONS

Holding Strength	270 ft-lb
Dirt Holding Capacity	4.0 lb-lft
Length Options	9", 12”, 24", 36"

Radial Magnetic Fields (12")	8
Radial Magnetic Field Diameter	6”
Magnetic Surface Area (12")	195.5 in^3

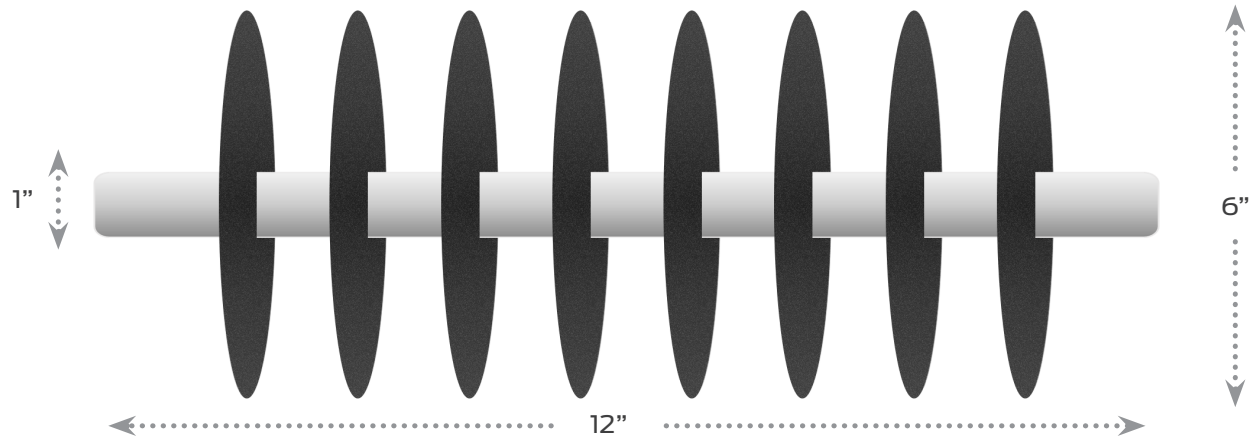

1 ½” OD X 12” L

SPECIFICATIONS

Holding Strength	500 ft-lb
Dirt Holding Capacity	16.0 lb-lft
Length Options	9", 12”, 24", 36"

Radial Magnetic Fields (12")	5
Radial Magnetic Field Diameter	7”
Magnetic Surface Area (12")	328.7 in^3

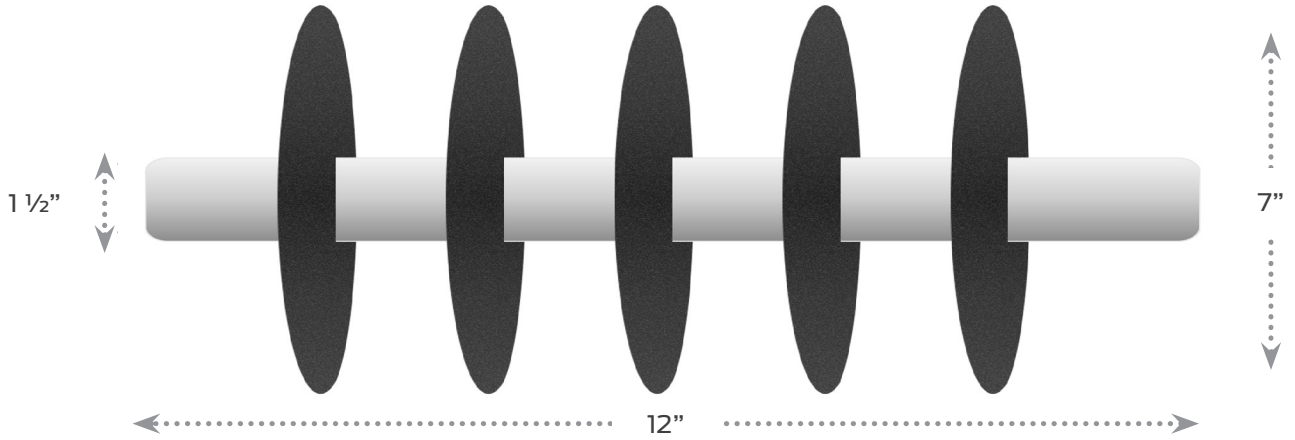

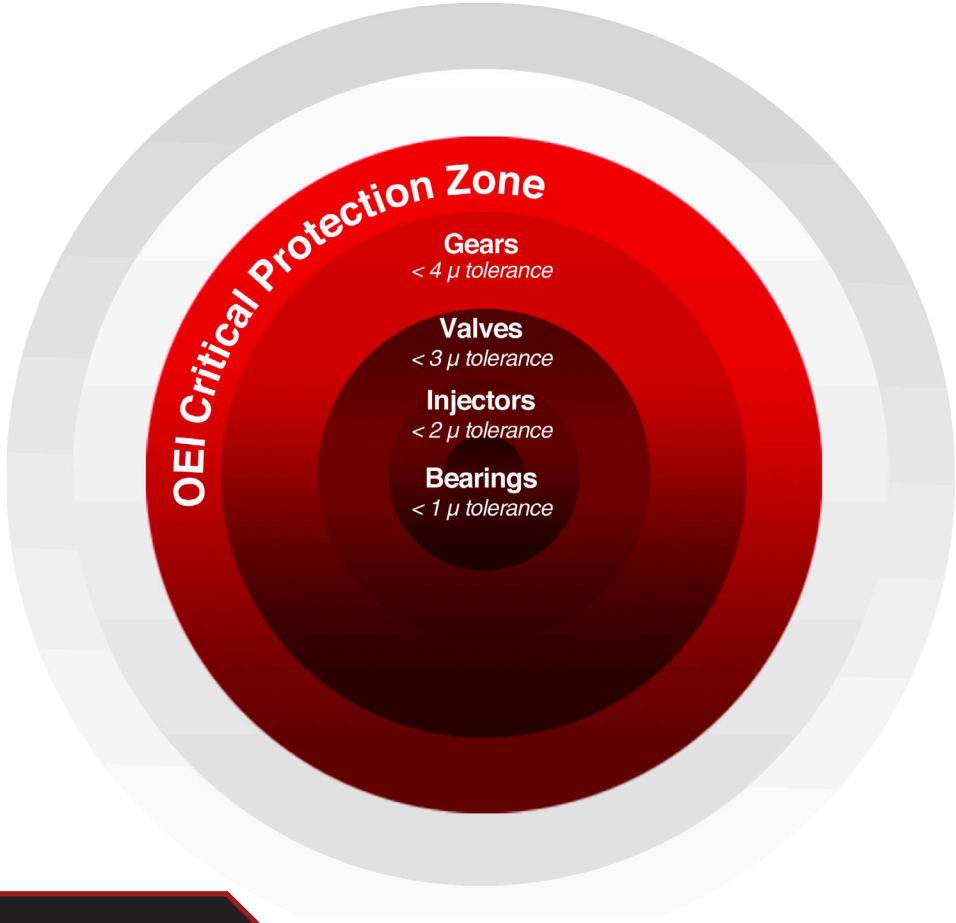

2” OD X 12” L

SPECIFICATIONS

Holding Strength	740 ft-lb
Dirt Holding Capacity	31.3 lb-lft
Length Options	9", 12”, 24", 36"

Radial Magnetic Fields (12")	5
Radial Magnetic Field Diameter	8”
Magnetic Surface Area (12")	420.9 in³

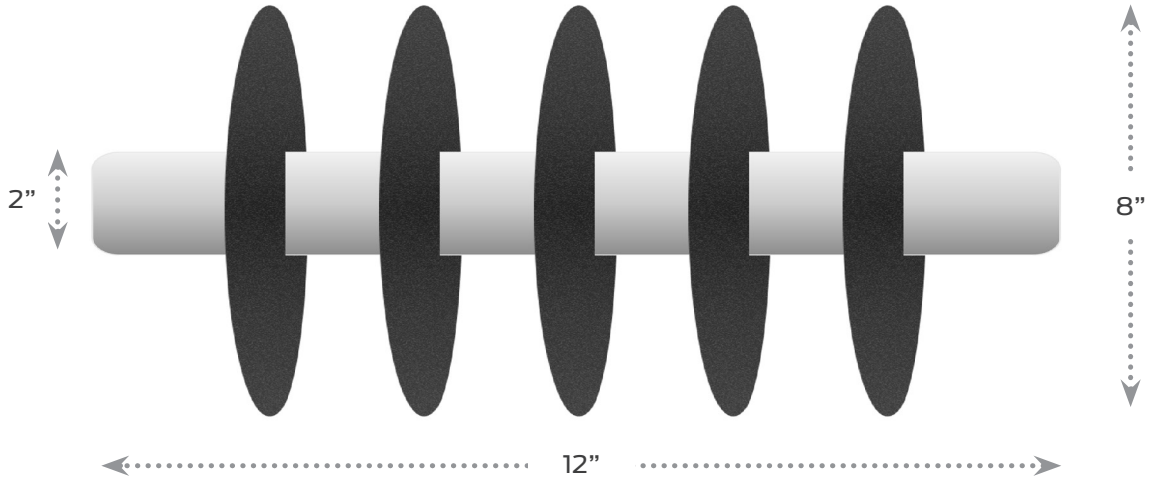

ONE EYE INDUSTRIES

ADD-VANTAGE 9000 SERIES

DESCRIPTION

The ADD-Vantage 9000 includes OEI's patented magnetic filter element as well as a stainless steel cloth element. Systems are optimized for fluid viscosity, flow volume, flow rate, temperature, mobility, and mounting requirements. Depending on the application, both "inside-out" and "outside-in" flow control designs are offered.

BENEFITS

- High holding capacity allows for extended planned maintenance periods
- Flows 43% more fluid or lube oil than conventional filters
- Continuous filtration in bypass
- Installs the same as conventional filters, no retrofitting required

FLOW CONTROL

» "Inside-out" flow control designs are recommended because the magnetic filter element is the primary filter. Its high holding capacity allows for extended operating life of the stainless steel cloth element which minimizes bypassing and extends cleaning intervals.

» "Outside-in" flow control operates with the stainless steel cloth element as the initial filter. The magnetic filter element acts as a secondary filter that enhances the systems filtration capability. If this filter goes into bypass, the magnetic filter element ensures continuous protection.

EFFICIENCY

Magnetic Filter Element	Ferrous Contamination	Captures ferrous wear particles down to 4 µ and below with up to 95+% efficiency.
	Non-ferrous Contamination	Non-ferrous particles are magnetically captured because of cross-contamination from static charge or embedded ferrous particles.
Stainless Steel Cloth Element Absolute Rating *Pleated, Flat Screen, Perforated*	10 µ, 25 µ, 40 µ, 150 µ	BETA 200 *Exceeds ISO 16889 Standards*
Eco-Coreless Disposable Element Nominal Rating *Available on the Inline High-flow, High-volume*	> 10 µ	BETA 200
	10 µ, 25 µ	BETA 1000
Stainless steel Perforated Element	1/4", 1/8", 1/16"	

ADD-VANTAGE 9000 STANDARD SPECIFICATIONS

OPERATING PARAMETERS

Pressure/Temperature Rating	Standard Heat	< 34.4 bar (500 psi) @ < 105º C (221° F)
	High Heat	< 34.4 bar (500 psi) @ < 204º C (400° F)
Viscosity Rating	< 1,000 cSt	
Bypass Settings	» 0.3 bar (5 psi) » 1 bar (15 psi)	» 3 bar (45 psi) » 4.5 bar (65 psi)

CLEANING

- Magnetic Filter Element: Remove the contamination with a lab cloth/non-fiber cloth that absorbs the contamination. Save the cloth in a sample bag to send for analysis.
- Stainless Steel Cloth Element: Separate the filter element from the bypass assembly and clean with a solvent, soap and water, a parts washer, or ultrasonically. Then let the element air dry.
- Use the magnetic filter element as a predictive maintenance tool by removing contamination with a lab cloth or rubber glove and depositing it into a sample jar. Send the contamination for analysis to determine the source of equipment component wear and prevent system failure.

MATERIALS

Magnetic Filter Element	Rare-earth magnets configured in a patented radial field design	
Filter Housing, End Caps, Mounts	Standard	Carbon Steel
	Non-Corrosive	Stainless Steel
Pleated, Flat Screen, Perforated Cloth-Media Element	Stainless Steel	
Eco-Coreless Disposable Elements *Available on the Inline High-flow, High-volume*	Z-media (Synthetic)	
Seals	Standard	Buna
	High Heat	Viton
	Sub-zero	EDPM

INSTALLATION

Port Size	½” - 3”
Port Type	» NPT » CD61 » BSPP » ORB » CD62 » BSPT » Flange

Mount Type	» Spin-on » Remote » Inline » In-tank
Element Clearance	Housing length + 4”

LIMITED WARRANTY

Magnetic Filter Element	3 years
Housing and Components	1 year

SERVICE LIFE

Magnetic Filter Element	18+ years
Stainless Steel Cloth Element	5 years

ADD-VANTAGE 9000 SERIES SPECIFICATIONS

TYPE	DESCRIPTION	PART NUMBER	PORT SIZE	HOUSING SIZE	FLOW CONTROL	FLOW RATE @ 68 CST	TEMP. RATING	MAGNETIC FILTER ELEMENT
DIRECT SPIN-ON	ADD-Vantage 9000's that spin directly onto OEM mounts.	9ADV9-#	N/A	3 5/8" OD x 7 1/2" L	Outside-in	21 gpm (75 L/min)	105º C (221º F)	1/2" OD
		9ADV9-#	N/A	4 1/4" OD x 10" L	Outside-in	45 gpm (170 L/min)	105º C (221º F)	1/2" OD
		9ADV9-#	N/A	5" OD x 9 7/8" L	Outside-in	50 gpm (189 L/min)	105º C (221º F)	3/4" OD
		9ADV9-#	N/A	5" OD x 12 5/8 " L	Outside-in	60 gpm (227 L/min)	105º C (221º F)	3/4" OD
REMOTE MOUNT SPIN-ON	Mounted ADD-Vantage to meet installation requirements of all fluid applications.	9ADV9-388FL NPT2-B-HP	1/2" – 2"	5" OD x 12" L	Inside-out	60 gpm (227 L/min)	105º C (221º F)	3/4" OD
		9ADV9-388FF NPT2-B-HP	1/2" – 2"	5" OD x 24" L	Inside-out	120 gpm (454 L/min)	105º C (221º F)	3/4" OD
		9ADV9-266FL-NPT2-B-HP	1/2" – 2"	5" OD x 12" L	Outside-in	60 gpm (227 L/min)	105º C (221º F)	3/4" OD
		9ADV9-266FF-NPT2-B-HP	1/2" – 2"	5" OD x 24" L	Outside-in	120 gpm (454 L/min)	105º C (221º F)	3/4" OD
	Screenless for low viscosity fluids like grease.	9ADV9-G12	1/2" – 2"	5" OD x 12" L	N/A	5 gpm (19 L/min)	105º C (221º F)	1" OD
	Duplex mount for continuous filtration.	9ADV9-D9L	1/2" – 2"	28" D x 13" W x 18" L	Inside-out	60 gpm (227 L/min)	105º C (221º F)	3/4" OD
IN-TANK	Tank-top, case-return applications.	9ADV9-MIT-306	1/2" – 1"	5" OD x 11 1/2" L	Inside-out	21 gpm (74 L/min)	105º C (221º F)	3/4" OD
		9ADV9-MIT-512	1/2" – 2"	5" OD x 19" L	Inside-out	60 gpm (227 L/min)	105º C (221º F)	1" OD
		9ADV9-MIT-520	1/2" – 2"	5" OD x 27" L	Inside-out	120 gpm (454 L/min)	105º C (221º F)	1" OD
		9ADV9-MIT-816	1/2" – 3"	8" OD x 27" L	Inside-out	150 gpm (568 L/min)	105º C (221º F)	1 1/2" OD
INLINE	Designed for high-volume, high-flow applications like bulk fuel. This ADD-Vantage comes with an eco-coreless filter media option.	9ADV9-820	1" – 3"	8" W x 14" D x 30" L	Inside-out	150 gpm (568 L/min)	105º C (221º F)	1 1/2" OD
		9ADV9-838	1" – 3"	8" W x 17" D x 50" L	Inside-out	300 gpm (1136 L/min)	105º C (221º F)	1 1/2" OD
	Stainless Steel construction for water applications.	9ADV9-VS116	1"	4" OD x 16" L	Inside-out	5 gpm (19 L/min)	75º C (167º F)	1/2" OD
		9ADV9-VS216	1"	4" OD x 16" L	Inside-out	5 gpm (19 L/min)	75º C (167º F)	1/2" OD
		9ADV9-VS220	1"	4" OD x 26" L	Inside-out	10 gpm (38 L/min)	75º C (167º F)	1/2" OD
	Housing constructed for dispensing applications.	9ADV9-700	2"	5" OD x 16" L	Inside-out	10 gpm (227 L/min)	105º C (221º F)	3/4" OD

ADD-VANTAGE 9000 SERIES

STAINLESS STEEL CLOTH ELEMENT PRESSURE DIFFERENTIALS

OUTSIDE-IN FLOW CONTROL

Housing Dimensions	5” OD x 12” L
Magnetic Element	¾” OD
Element Efficiency	BETA 200
Fluid	Hydraulic Oil ISO 32

Flow Rate	Stainless Steel Cloth Element Micron Rating		
	10 µ	25 µ	40 µ
5 gpm (18.9 L/min)	0.1 bar (1.4 psi)	0.0 bar (0.3 psi)	0.0 bar (0.4 psi)
10 gpm (37.9 L/min)	0.2 bar (2.5 psi)	0.0 bar (0.6 psi)	0.0 bar (0.6 psi)
15 gpm (56.8 L/min)	0.2 bar (3.4 psi)	0.0 bar (0.6 psi)	0.1 bar (0.8 psi)
20 gpm (79.7 L/min)	0.3 bar (4.5 psi)	0.0 bar (0.7 psi)	0.1 bar (0.9 psi)
25 gpm (94.6 L/min)	0.4 bar (5.4 psi)	0.1 bar (0.8 psi)	0.1 bar (1 psi)
30 gpm (113.6 L/min)	0.5 bar (6.7 psi)	0.1 bar (1 psi)	0.1 bar (1.4 psi)
35 gpm (132.5 L/min)	0.6 bar (8 psi)	0.1 bar (1.2 psi)	0.1 bar (1.5 psi)
40 gpm (151.4 L/min)	0.7 bar (9.5 psi)	0.1 bar (1.3 psi)	0.1 bar (1.7 psi)
45 gpm (170.3 L/min)	0.7 bar (10.4 psi)	0.1 bar (1.4 psi)	0.1 bar (1.9 psi)

PRESSURE DIFFERENTIALS
ADD-Vantage 9000 Stainless steel Cloth Elements, Outside-in Flow Control

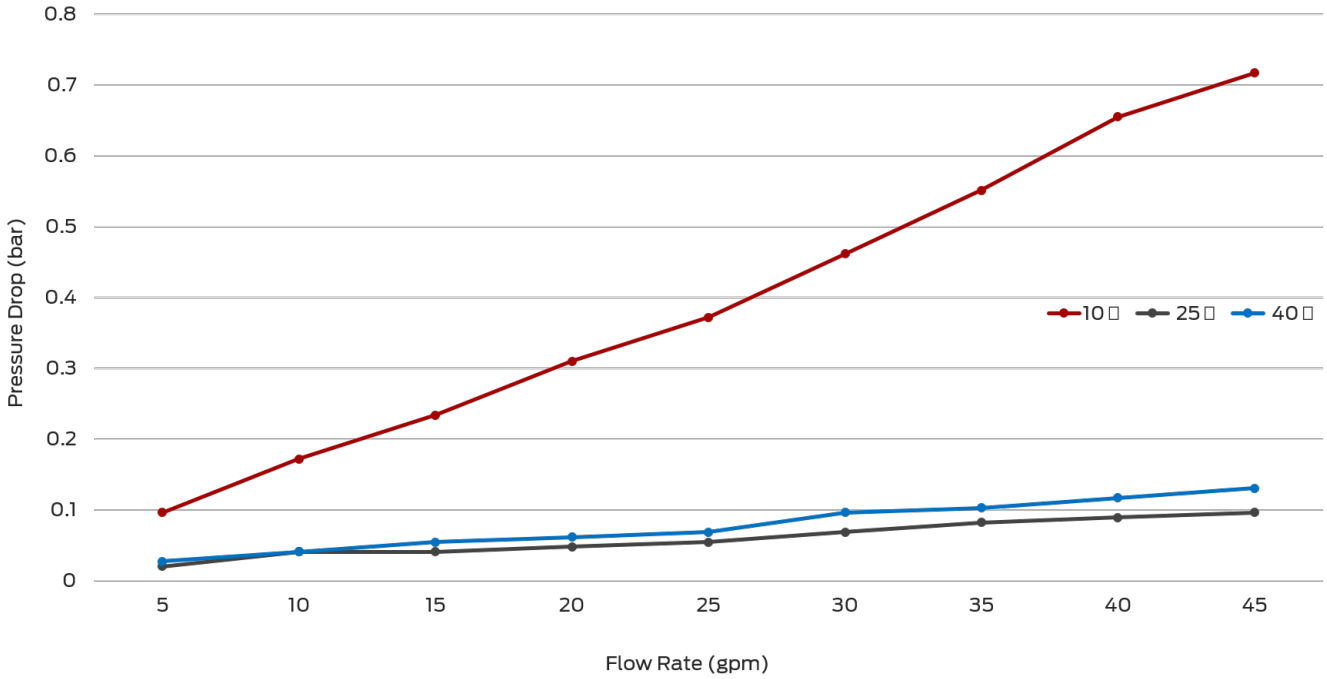

INSIDE-OUT FLOW CONTROL

Housing Dimensions	5” OD x 12” L
Magnetic Element	¾” OD
Element Efficiency	BETA 200
Fluid	Hydraulic Oil ISO 32

Flow Rate	Stainless Steel Cloth Element Micron Rating		
	10 µ	25 µ	40 µ
5 gpm (18.9 L/min)	0.2 bar (2.9 psi)	0.0 bar (0.3 psi)	0.0 bar (0.3 psi)
10 gpm (37.9 L/min)	0.3 bar (3.8 psi)	0.0 bar (0.4 psi)	0.0 bar (0.5 psi)
15 gpm (56.8 L/min)	0.4 bar (5.2 psi)	0.0 bar (0.6 psi)	0.0 bar (0.7 psi)
20 gpm (79.7 L/min)	0.5 bar (6.7 psi)	0.0 bar (0.6 psi)	0.0 bar (0.7 psi)
25 gpm (94.6 L/min)	0.6 bar (8 psi)	0.0 bar (0.7 psi)	0.1 bar (0.9 psi)
30 gpm (113.6 L/min)	0.7 bar (9.4 psi)	0.1 bar (0.9 psi)	0.1 bar (1.2 psi)
35 gpm (132.5 L/min)	0.7 bar (10.3 psi)	0.1 bar (0.9 psi)	0.1 bar (1.3 psi)
40 gpm (151.4 L/min)	0.7 bar (10.7 psi)	0.1 bar (1.1 psi)	0.1 bar (1.5 psi)
45 gpm (170.3 L/min)	0.8 bar (11.8 psi)	0.1 bar (1.1 psi)	0.1 bar (1.5 psi)

PRESSURE DIFFERENTIALS
ADD-Vantage 9000 Stainless Steel Cloth Elements, Inside-out Flow Control

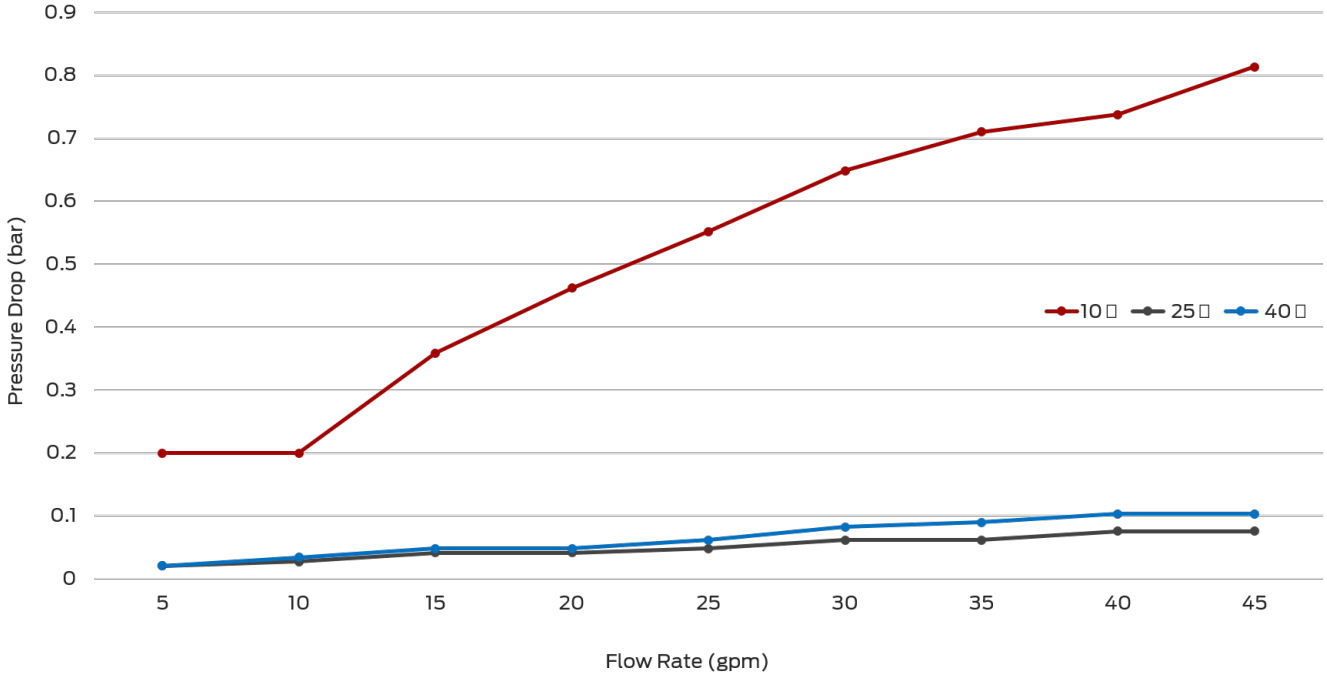

ADD-VANTAGE 9000

REMOTE MOUNT PERFORMANCE DATA

OUTSIDE-IN FLOW CONTROL

Housing Dimensions	5” OD x 12” L
Magnetic Element	¾” OD
Element Efficiency	BETA 200
Fluid	Hydraulic Oil ISO 32

Flow Rate	Stainless Steel Cloth Element Micron Rating		
	10 µ	25 µ	40 µ
5 gpm (18.9 L/min)	0.1 bar (1.5 psi)	0.0 bar (0.4 psi)	0.0 bar (0.5 psi)
10 gpm (37.9 L/min)	0.2 bar (2.7 psi)	0.1 bar (0.8 psi)	0.1 bar (0.8 psi)
15 gpm (56.8 L/min)	0.3 bar (3.9 psi)	0.1 bar (1.1 psi)	0.1 bar (1.3 psi)
20 gpm (79.7 L/min)	0.4 bar (5.3 psi)	0.1 bar (1.5 psi)	0.1 bar (1.7 psi)
25 gpm (94.6 L/min)	0.5 bar (6.6 psi)	0.1 bar (2 psi)	0.2 bar (2.2 psi)
30 gpm (113.6 L/min)	0.6 bar (8.2 psi)	0.2 bar (2.5 psi)	0.2 bar (2.9 psi)
35 gpm (132.5 L/min)	0.7 bar (10 psi)	0.2 bar (3.2 psi)	0.2 bar (3.5 psi)
40 gpm (151.4 L/min)	0.8 bar (12 psi)	0.3 bar (3.8 psi)	0.3 bar (4.2 psi)
45 gpm (170.3 L/min)	0.9 bar (13.4 psi)	0.3 bar (4.4 psi)	0.3 bar (4.9 psi)

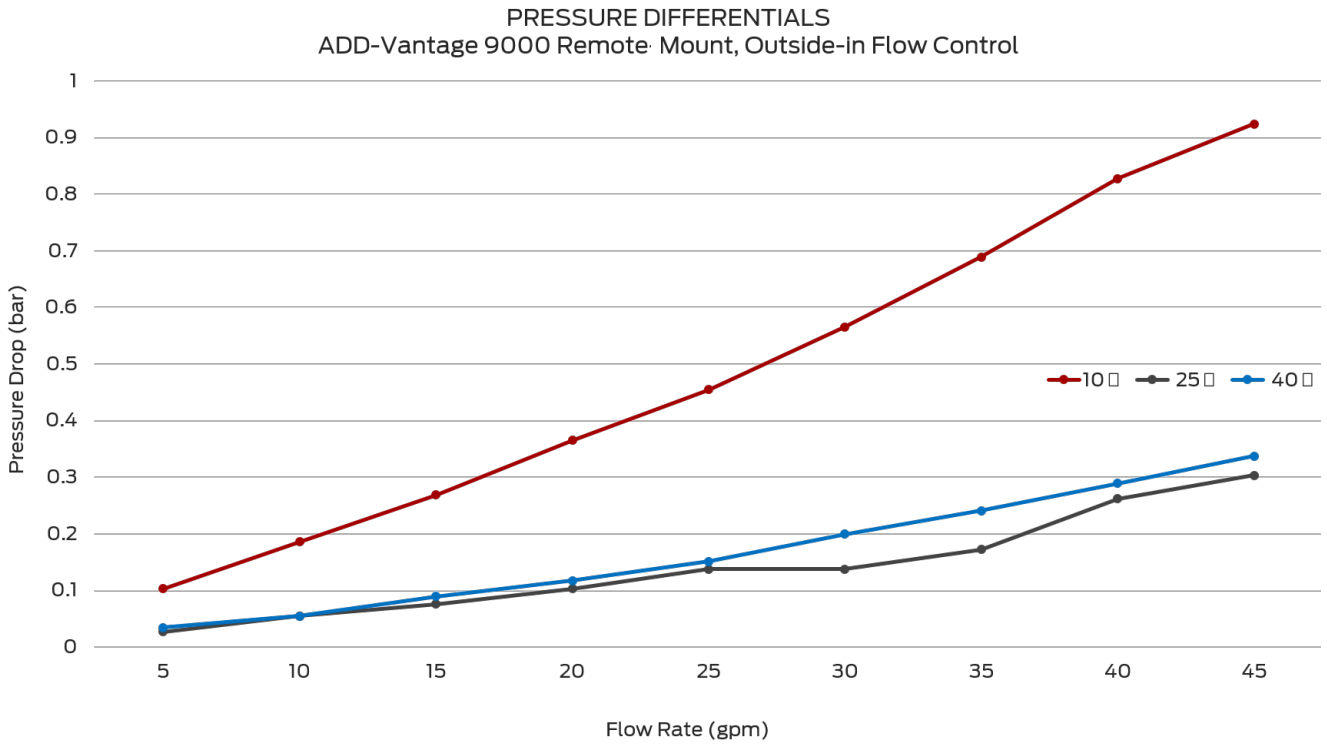

INSIDE-OUT FLOW CONTROL

Housing Dimensions	5” OD x 12” L
Magnetic Element	¾” OD
Element Efficiency	BETA 200
Fluid	Hydraulic Oil ISO 32

Flow Rate	Stainless Steel Cloth Element Micron Rating		
	10 µ	25 µ	40 µ
5 gpm (18.9 L/min)	0.2 bar (3 psi)	0.0 bar (0.4 psi)	0.0 bar (0.4 psi)
10 gpm (37.9 L/min)	0.3 bar (4 psi)	0.0 bar (0.6 psi)	0.0 bar (0.7 psi)
15 gpm (56.8 L/min)	0.4 bar (5.7 psi)	0.1 bar (1.1 psi)	0.1 bar (1.2 psi)
20 gpm (79.7 L/min)	0.5 bar (7.5 psi)	0.1 bar (1.4 psi)	0.1 bar (1.5 psi)
25 gpm (94.6 L/min)	0.6 bar (9.2 psi)	0.1 bar (1.9 psi)	0.1 bar (2.1 psi)
30 gpm (113.6 L/min)	0.8 bar (10.9 psi)	0.2 bar (2.4 psi)	0.2 bar (2.7 psi)
35 gpm (132.5 L/min)	0.9 bar (12.3 psi)	0.2 bar (2.9 psi)	0.2 bar (3.3 psi)
40 gpm (151.4 L/min)	0.9 bar (13.2 psi)	0.3 bar (3.6 psi)	0.3 bar (4 psi)
45 gpm (170.3 L/min)	1.0 bar (14.8 psi)	0.3 bar (4.1 psi)	0.2 bar (4.5 psi)

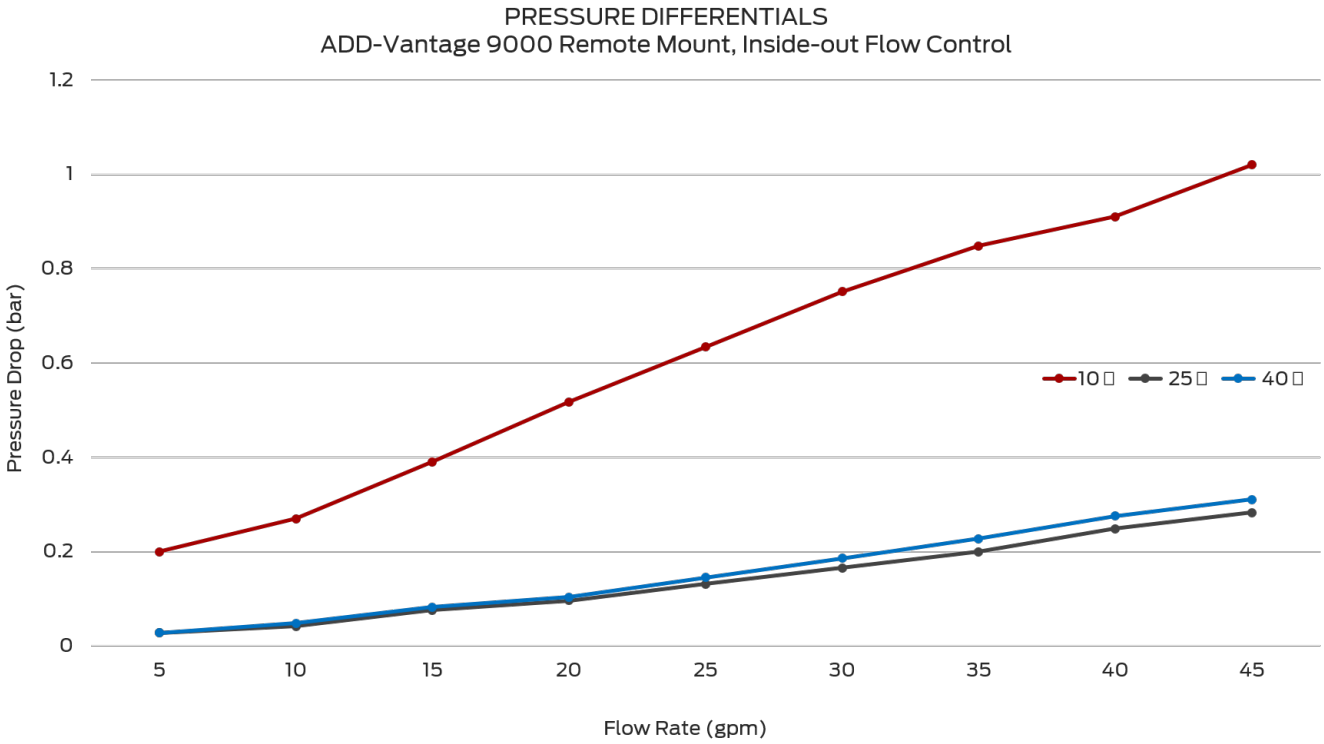

ONE EYE INDUSTRIES

SCRUBBER SERIES

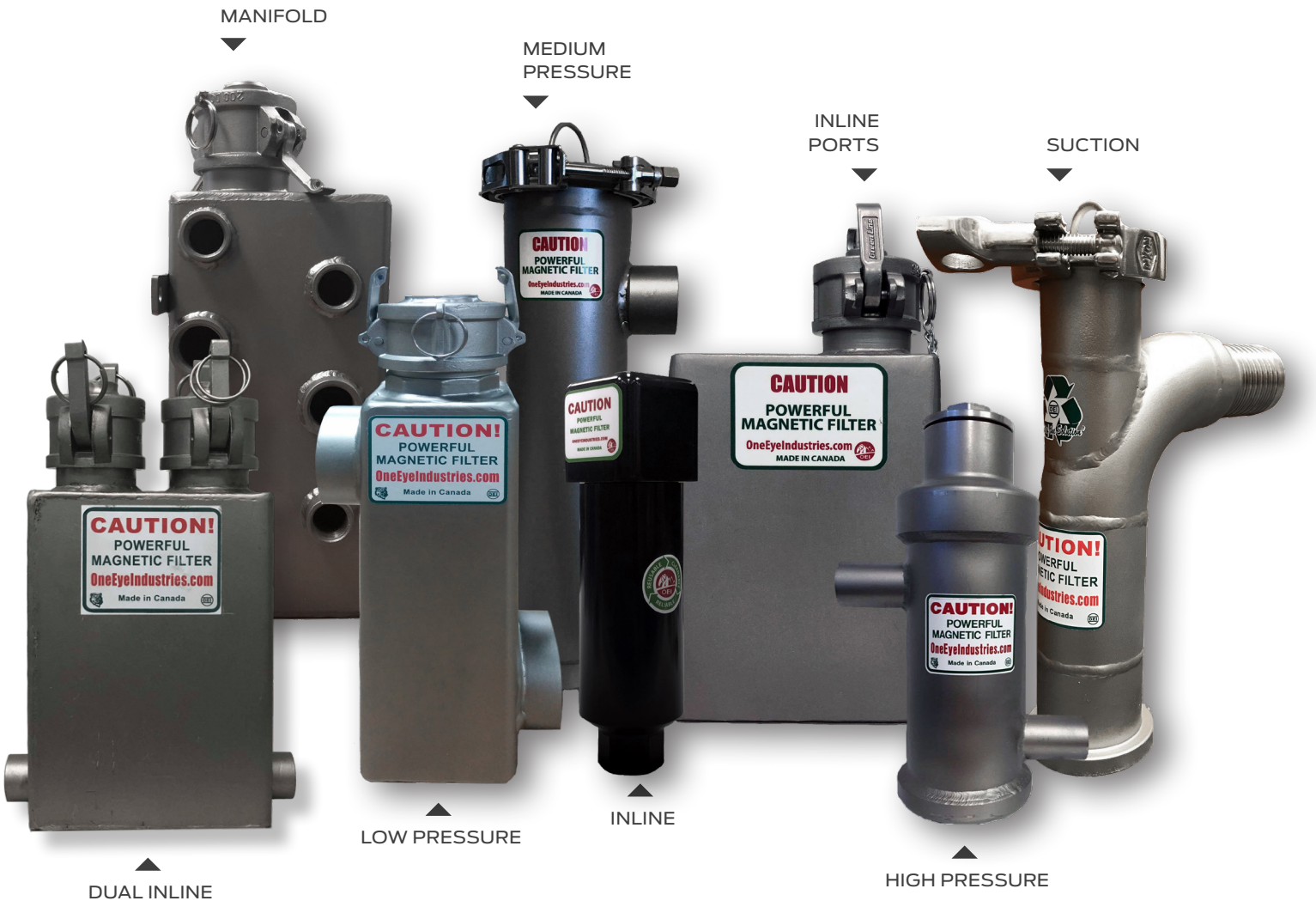

SCRUBBER SERIES

DESCRIPTION

Magnetic filter scrubbers employ a magnetic filter element in a specialty housing designed to operate with minimal flow restriction and maximum fluid exposure for high-efficiency filtration. Flow is regulated by the diameter of the inlet-outlet supply pipe as well as fluid velocity. These systems install on suction and return lines of high-pressure and low-pressure applications.

BENEFITS

- Minimal flow restriction allows for suction line installation and pump protection.
- High holding capacity allows for extended planned maintenance periods.
- Acts as an effective predictive maintenance tool if contamination is collected and analyzed to determine sources of equipment component wear.

EFFICIENCY

Magnetic Filter Element	Ferrous Contamination	Captures ferrous wear particles down to 4 µ and below with up to 95+% efficiency.
	Non-ferrous Contamination	Non-ferrous particles are magnetically captured because of cross-contamination from static charge or embedded ferrous particles.

OPERATING PARAMETERS

Pressure / Temperature Rating	Standard	< 10.3 bar (150 psi) @ < 105º C (221° F)
	High Heat	< 34.4 bar (500 psi) @ < 204.4º C (400° F)
Viscosity Rating	Standard	< 680 cSt
	Low Viscosity	< 2,000 cSt
Bypass Settings	Continuous filtration with no internal bypassing	

CLEANING

Magnetic Filter Element: Remove the contamination by wiping downward with a lab cloth or rubber glove.

Use the magnetic filter element as a predictive maintenance tool by removing contamination with a lab cloth or rubber glove and depositing it into a sample jar. Send the contamination for analysis to determine the source of equipment component wear and prevent system failure.

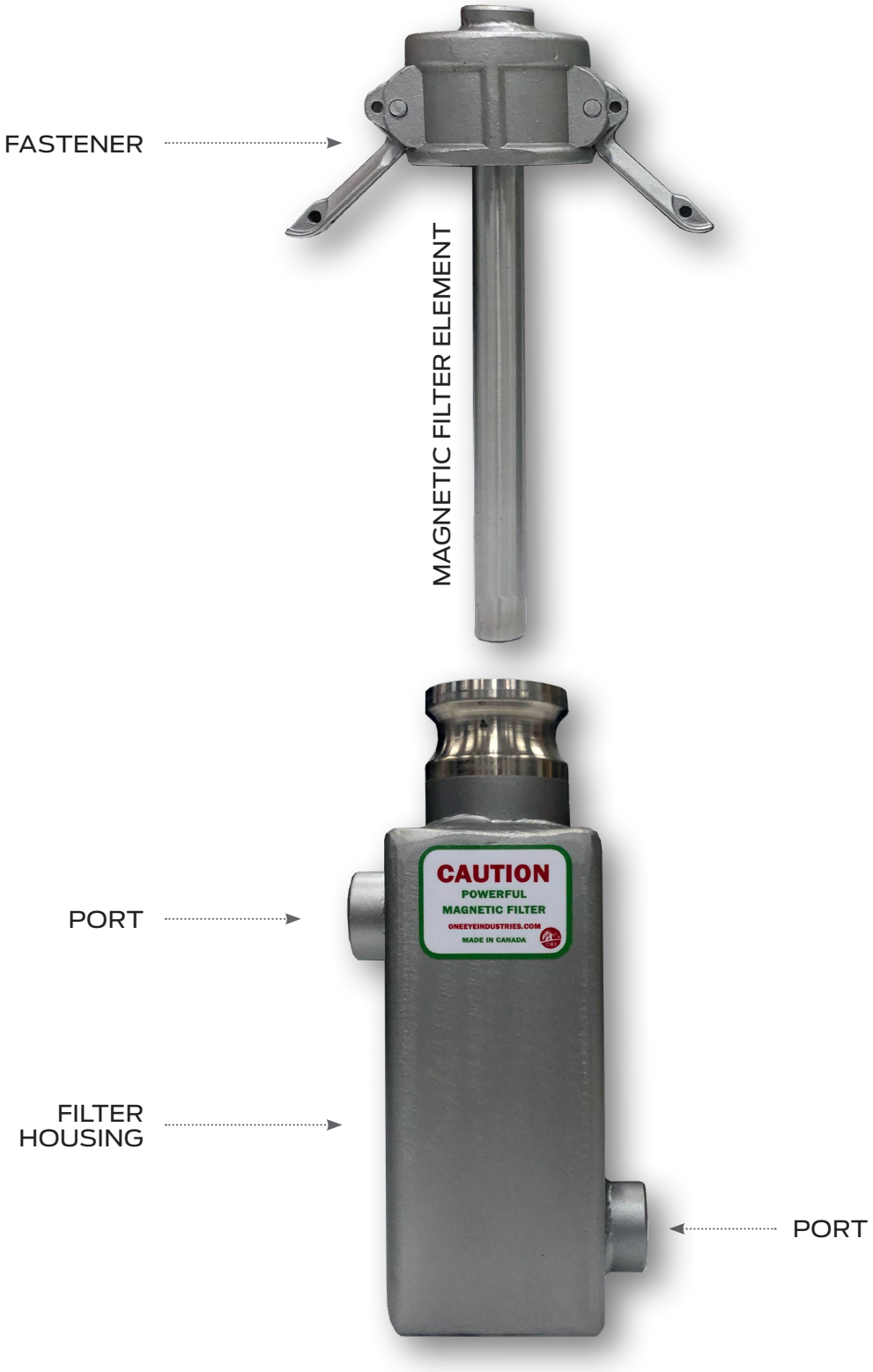

Standard design with 180º offset ports

STANDARD SCRUBBER SPECIFICATIONS

MATERIALS

Magnetic Filter Element	Rare-earth magnets configured in a patented radial field design.	
Filter Housing, Drain Plugs, End Caps, Mounts	Standard	Stainless Steel
	Specialty Materials	» Monel » Other alloys available
Seals	Standard Heat	Buna
	HIgh Heat	Viton
	Sub-zero	EDPM

CONFIGURATIONS

Magnetic Filter Element	Quantities	» Single » Dual	» Dual Inline » Triple	» Quadruple	
	Lengths	» 9”	» 12"	» 24"	» 36"
Housings	Square	< 10.3 bar (150 psi)			
	Round	< 34.4 bar (500 psi)			
Fasteners	Cam-lock	< 10.3 bar (150 psi)			
	ORB, Flange	< 34.4 bar (500 psi)			
Ports	» Inline	» Parallel Ports	» Upper housing » Lower housing		
	» Offset	» 0º Offset » 90º Offset	» 180º Offset » 270º Offset		
	» Multi-port	» Manifold			

INSTALLATION

Port Size *Custom sizes available*	½” - 2 ½”			
Port Type	» NPT » ORB	» CD61 » CD62	» BSPT » BSPP	» Flange
Mount Type	» Inline » Vertical	» Horizontal		
Element Clearance	Housing length + 4”			

LIMITED WARRANTY

Magnetic Filter Element	3 years
Housing and Components	1 year

SERVICE LIFE

Magnetic Filter Element	18+ years

SCRUBBER SERIES SPECIFICATIONS

		DESCRIPTION	PART NUMBER	PRESSURE RATING	TEMP. RATING	HOUSING SIZE	MAGNETIC FILTER ELEMENT
LOW PRESSURE		*OEI standard magnetic filter scrubber is designed with a square housing, typically with a camlock fastener. These units install with multiple port size, location, and fitting options.*	5SC349S	< 10.3 bar (150 psi)	105° C (221° F)	3" L x 3" W x 9" H	¾" OD
			5SC12S	< 10.3 bar (150 psi)	105° C (221° F)	4" L x 4" W x 12" H	1" OD
			5SC24S	< 10.3 bar (150 psi)	105° C (221° F)	4" L x 4" W x 24" H	1" OD
MEDIUM PRESSURE		*Fluid applications requiring pressures over 150 psi are designed with a round housing and ORB, or flange fastener.*	5SC349RORB	< 34.4 bar (500 psi)	105° C (221° F)	3" OD x 9" H	¾" OD
			5SC12RORB	< 34.4 bar (500 psi)	105° C (221° F)	4" OD X 12" H	1" OD
			5SC24RORB	< 34.4 bar (500 psi)	105° C (221° F)	4" OD x 24" H	1" OD
HIGH PRESSURE		*Designed for high pressure applications up to 5000 psi.*	5SMP	< 206.8 bar (3000 psi)	75° C (167° F)	3 ½" OD x 17" H	1" OD
			5SHP	< 344.7 bar (5000 psi)	75° C (167° F)	3 ½" OD x 17" H	1" OD
SPECIALTY	INLINE	*With a billet aluminum housing, this scrubber installs inline for low-pressure, light viscosity, low-flow applications.*	5IL04	6.9 bar (100 psi)	105° C (221° F)	2 ¼" OD x 6" H	½" OD
			5IL05	6.9 bar (100 psi)	105° C (221° F)	2 ¼" OD x 7 ¼" H	¾" OD
			5IL905	6.9 bar (100 psi)	105° C (221° F)	2 ¼" OD x 9 ¼" H	¾" OD
	FUNNEL	*This scrubber installs inline on food and material production lines.*	4FS#	24.1 bar (350 psi)	121.1° C (250° F)	4" OD x 27" H	1" OD

PART NUMBER		Flow Rate (gpm)					
		30 cSt	110 cSt	220 cSt	460 cSt	680 cSt	1,000 cSt
5SC349S	Single-Pass	8 gpm (30.3 L/min)	7 gpm (26.9 L/min)	6 gpm (22.7 L/min)	5 gpm (18.9 L/min)	3 gpm (11.4 L/min)	NA
	Multi-Pass	30 gpm (113.6 L/min)	30 gpm (113.6 L/min)	15 gpm (56.8 L/min)	10 gpm (37.9 L/min)	5 gpm (18.9 L/min)	NA
5SC12S	Single-Pass	21 gpm (79.5 L/min)	20 gpm (75.7 L/min)	15 gpm (56.8 L/min)	12 gpm (45.4 L/min)	6 gpm (22.7 L/min)	3 gpm (11.4 L/min)
	Multi-Pass	81 gpm (306.6 L/min)	65 gpm (246.1 L/min)	41 gpm (155.2 L/min)	25 gpm (94.6 L/min)	13 gpm (49,2 L/min)	5 gpm (18.9 L/min)
5SC24S	Single-Pass	40 gpm (151.4 L/min)	38 gpm (143.9 L/min)	30 gpm (113.6 L/min)	20 gpm (75.7 L/min)	10 gpm (37.9 L/min)	10 gpm (37.9 L/min)
	Multi-Pass	95 gpm (359.6 L/min)	80 gpm (302.8 L/min)	76 gpm (287.7 L/min)	30 gpm (113.6 L/min)	16 gpm (60.6 L/min)	8 gpm (30.3 L/min)
5SC349RORB	Single-Pass	8 gpm (30.3 L/min)	7 gpm (26.9 L/min)	6 gpm (22.7 L/min)	5 gpm (18.9 L/min)	3 gpm (11.4 L/min)	NA
	Multi-Pass	30 gpm (113.6 L/min)	30 gpm (113.6 L/min)	15 gpm (56.8 L/min)	10 gpm (37.9 L/min)	5 gpm (18.9 L/min)	NA
5SC12RORB	Single-Pass	21 gpm (79.5 L/min)	20 gpm (75.7 L/min)	15 gpm (56.8 L/min)	12 gpm (45.4 L/min)	6 gpm (22.7 L/min)	3 gpm (11.4 L/min)
	Multi-Pass	81 gpm (306.6 L/min)	65 gpm (246.1 L/min)	41 gpm (155.2 L/min)	25 gpm (94.6 L/min)	13 gpm (49.2 L/min)	5 gpm (18.9 L/min)
5SC24RORB	Single-Pass	40 gpm (151.4 L/min)	38 gpm (143.9 L/min)	30 gpm (113.6 L/min)	20 gpm (75.7 L/min)	10 gpm (37.9 L/min)	10 gpm (37.9 L/min)
	Multi-Pass	95 gpm (359.6 L/min)	80 gpm (302.8 L/min)	76 gpm (287.7 L/min)	30 gpm (113.6 L/min)	16 gpm (60.6 L/min)	8 gpm (30.3 L/min)
5SMP	Single-Pass	7 gpm (26.9 L/min)	7 gpm (26.9 L/min)	6 gpm (22.7 L/min)	5 gpm (18.9 L/min)	3 gpm (11.4 L/min)	NA
	Multi-Pass	30 gpm (113.6 L/min)	30 gpm (113.6 L/min)	15 gpm (56.8 L/min)	10 gpm (37.9 L/min)	5 gpm (18.9 L/min)	NA
5SHP	Single-Pass	7 gpm (26.9 L/min)	7 gpm (26.9 L/min)	6 gpm (22.7 L/min)	5 gpm (18.9 L/min)	3 gpm (11.4 L/min)	NA
	Multi-Pass	30 gpm (113.6 L/min)	30 gpm (113.6 L/min)	15 gpm (56.8 L/min)	10 gpm (37.9 L/min)	5 gpm (18.9 L/min)	NA
5IL04	Single-Pass	2 gpm (7.6 L/min)	NA	NA	NA	NA	NA
	Multi-Pass	4 gpm (15.1 L/min)	NA	NA	NA	NA	NA
5IL05	Single-Pass	3 gpm (11.4 L/min)	NA	NA	NA	NA	NA
	Multi-Pass	6 gpm (22.7 L/min)	NA	NA	NA	NA	NA
5IL905	Single-Pass	3 gpm (11.4 L/min)	NA	NA	NA	NA	NA
	Multi-Pass	6 gpm (22.7 L/min)	NA	NA	NA	NA	NA
4FS4200	Single-Pass	20 gpm (75.7 L/min)	NA	NA	NA	NA	NA
	Multi-Pass	NA	NA	NA	NA	NA	NA

ONE EYE INDUSTRIES

SOLVING TOMORROW'S CHALLENGES, TODAY.

OneEyeIndustries.com
4344 12 Street SE
Calgary, AB T2G 3H9
Canada

403.242.4221
Quotes@OneEyeIndustries.com