2021

CORE TECHNOLOGY

OEI's Patented Radial Magnetic Field
Technology Defies the Force of Gravity

ONE EYE INDUSTRIES

SOLVING TOMORROW'S CHALLENGES TODAY.

©2021 One Eye Industries Inc. All rights reserved.

The core technology in all One Eye Industries magnetic filtration products is a magnetic filter element designed with a patented radial magnetic field configuration to remove wear particles down to 4 microns and below. The magnetic filter element is utilized in various housings with calculated dwell times for optimal filtration.

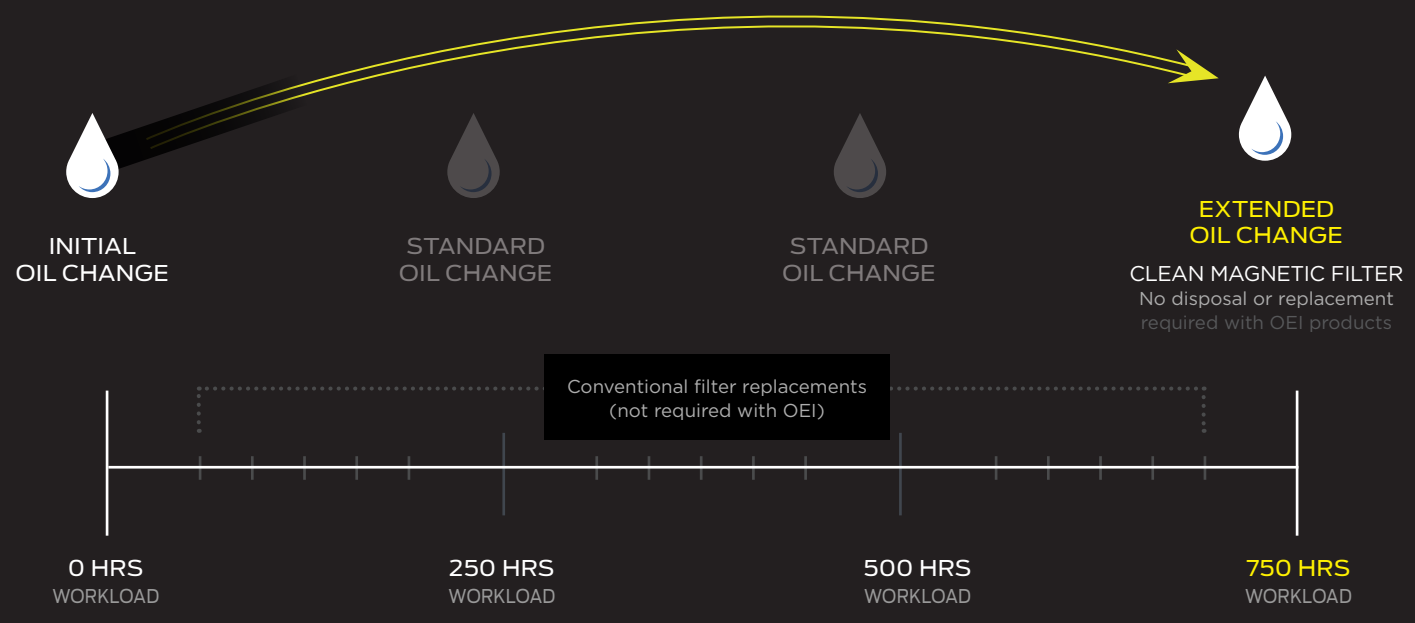

EXTENDED FLUID LIFE ➡ PROTECTED EQUIPMENT ➡ EXTENDED EQUIPMENT LIFE

*Source: Noria Corporation

ONE EYE INDUSTRIES

CORE TECHNOLOGY

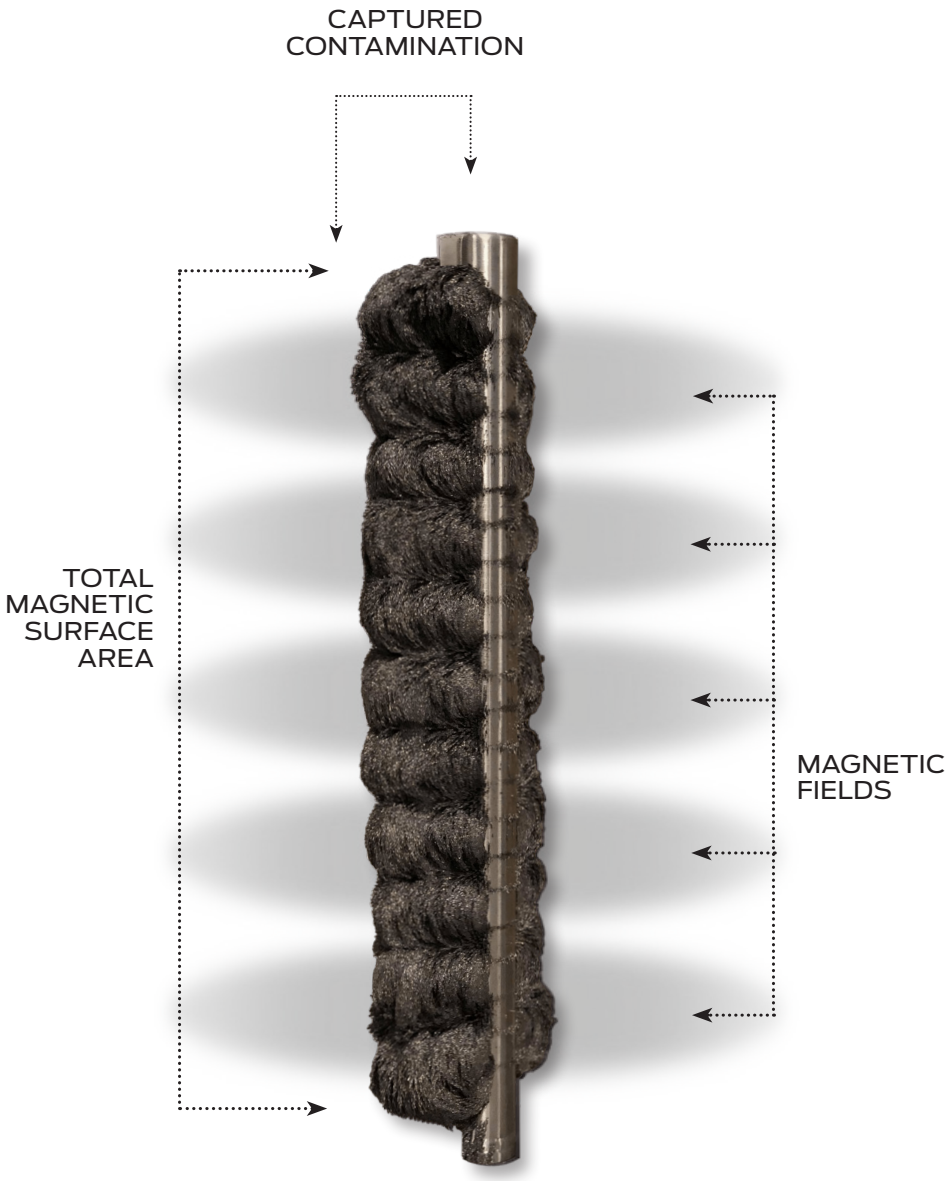

CORE TECHNOLOGY

DESCRIPTION

The patented magnetic filter element attracts ferrous wear particles down to 4 microns and below with up to 95+% efficiency. The magnetic filter element attracts both ferrous and non-ferrous particles. The radial magnetic field design offers incredible holding strength and a high dirt holding capacity.

OEI magnetic filter elements are employed in various housings designed with calculated dwell times for optimal filtration. Magnetic filter elements come in five sizes from ½" to 2" outer diameter (OD) (shown below).

1" magnetic filter elements with varying loads of contamination. Dirt holding capacity*: 3.97 lb-ft.

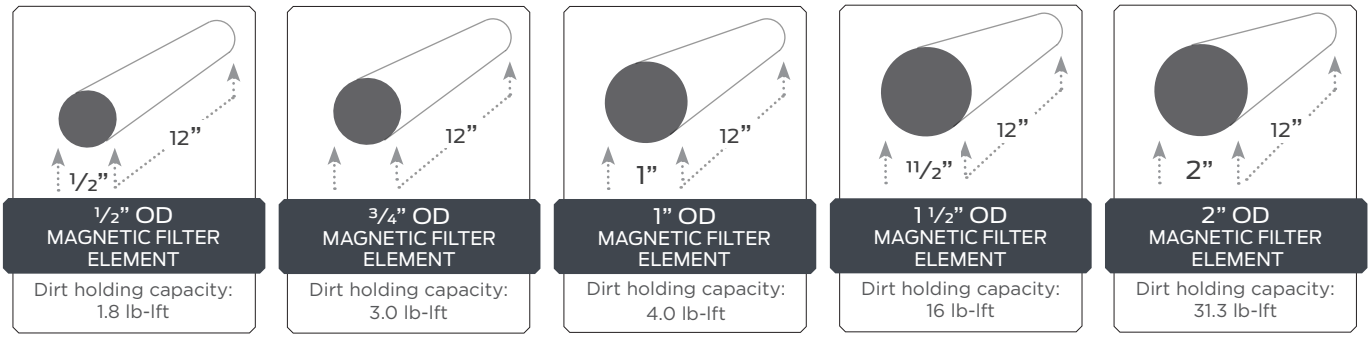

*Dirt holding capacity is the quantity of contaminant mass a filter element can trap and hold before the maximum allowable back pressure, or delta P level, is reached.

CORE TECHNOLOGY BENEFITS

CLEAN AND REUSE

OEI products are reusable for 18+ years, and require minimal consumables. Conventional filters require frequent, costly changeouts, and disposal.

PREDICTIVE MAINTENANCE

OEI Magnetic Filter Elements are effective predictive maintenance tools when used for condition monitoring. When removed for inspection, magnetic filter elements will have varying quantities of contamination. Abnormally high quantities of contamination indicate component failure. The composition of contamination will identify which components are stressed, worn, or failing.

Visual analysis of the quantities of wear contamination collected on magnetic filter plugs can determine component failure. Analysis of wear particle compositions and sizes will determine early component wear.

GOES WHERE NO CONVENTIONAL FILTER HAS GONE BEFORE

OEI magnetic filters can be installed on suction lines to protect pumps without risk of cavitation. Unlike conventional filters, they accommodate space restrictions and unique applications such as splash oil gearboxes, reservoirs, and small coolant lines.

CAPTURES NON-FERROUS CONTAMINATION

Non-ferrous particles are magnetically captured because of cross-contamination. Particles become statically charged from flow velocity. This charge is a principal force of particle adhesion; iron particles contaminate non-ferrous particles by adhering to their statically charged surface. Another form of cross-contamination occurs when sub-micron iron particles embed in softer non-ferrous particles after abrasive impact.

PREVENT OXIDIZATION AND VARNISH

OEI effectively removes iron and steel particles under 10 microns that are known to promote oil oxidation because of their catalytic properties. Oxidation can deplete additives that protect against wear, corrosion, sludge, varnish, and viscosity changes that affect the thickness of films between bearing surfaces, friction, control of temperature, and energy consumption.

NO WORMHOLING OR CHANNELING

OEI filters eliminate the opportunity for wormholing and channeling that conventional paper, fiberglass, and polymer media filter elements are subject to.
Wormholing: when wear contamination punctures the filter media.
Channeling: when fluid flows through punctured holes because it takes the path of least resistance.

MAGNETIC FILTER ELEMENT

EFFICIENCY

Ferrous Contamination Filtration	Captures ferrous wear particles down to 4 μ and below with up to 95+% efficiency.
Non-Ferrous Contamination Filtration	Non-ferrous particles are magnetically captured because of cross-contamination. Particles become statically charged from flow velocity. This charge is a principal force of particle adhesion; iron particles contaminate non-ferrous particles by adhering to their statically charged surface. Another form of cross-contamination occurs when sub-micron iron particles embed in softer, non-ferrous particles after abrasive impact.

OPERATING PARAMETERS

Pressure Rating	Standard	< 34.5 bar (500 psi)
	High Pressure	< 689.5 bar (10000 psi)
Temperature Rating	Standard	< 150° C (300° F)
	High Heat	< 300° C (600° F)
Flow Rate	Housing Dependent	
Bypass Setting	Continuous	

CLEANING

Remove the magnetic filter element from the housing, then remove the contamination with a lab cloth/ non-fiber cloth that absorbs the contamination. Save the cloth in a sample bag to send for analysis.

Use the magnetic filter element as a predictive maintenance tool by removing contamination with a lab cloth or rubber glove and depositing it into a sample jar. Send the contamination for analysis to determine the source of equipment component wear and prevent system failure.

MATERIALS

Magnetic Filter Element	Rare-earth magnets are configured in a patented radial field design
Casing	Stainless Steel

LIMITED WARRANTY

Magnetic Filter Element	3 years

SERVICE LIFE

Magnetic Filter Element	18+ years

½” OD X 12” L

SPECIFICATIONS

Holding Strength	57 ft-lb
Dirt Holding Capacity	1.8 lb-lft
Length Options	9", 12”, 24"

Radial Magnetic Fields (12")	10
Radial Magnetic Field Diameter	3"
Magnetic Surface Area (12")	68.7 in^3

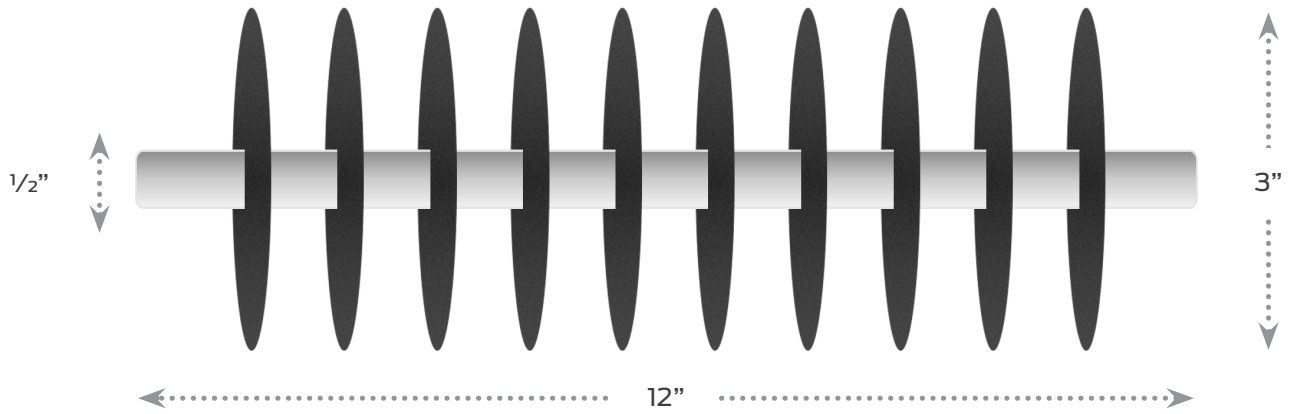

¾” OD X 12” L

SPECIFICATIONS

Holding Strength	123 ft-lb
Dirt Holding Capacity	3.0 lb-lft
Length Options	9", 12”, 24", 36"

Radial Magnetic Fields (12")	10
Radial Magnetic Field Diameter	4”
Magnetic Surface Area (12")	125.2 in^3

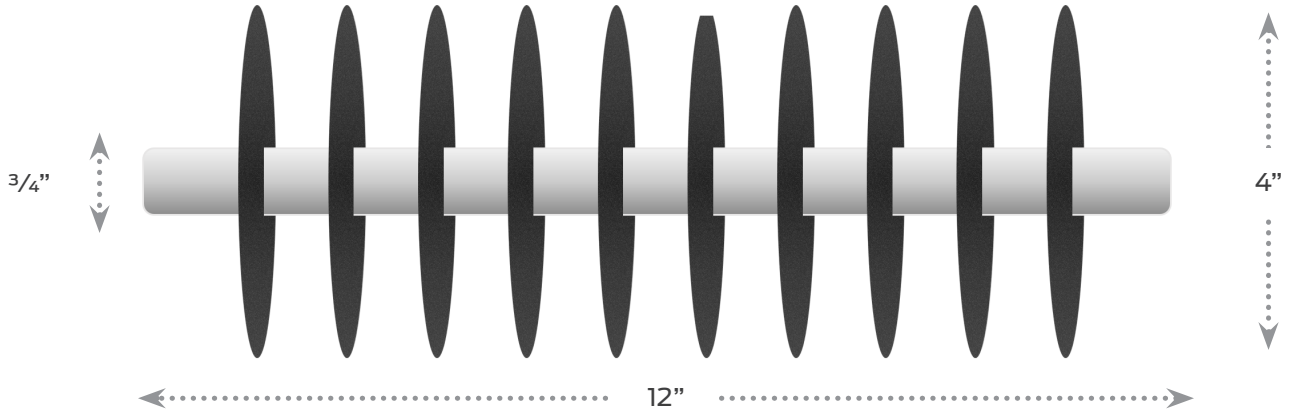

1” OD X 12” L

SPECIFICATIONS

Holding Strength	270 ft-lb
Dirt Holding Capacity	4.0 lb-lft
Length Options	9", 12”, 24", 36"

Radial Magnetic Fields (12")	8
Radial Magnetic Field Diameter	6”
Magnetic Surface Area (12")	195.5 in^3

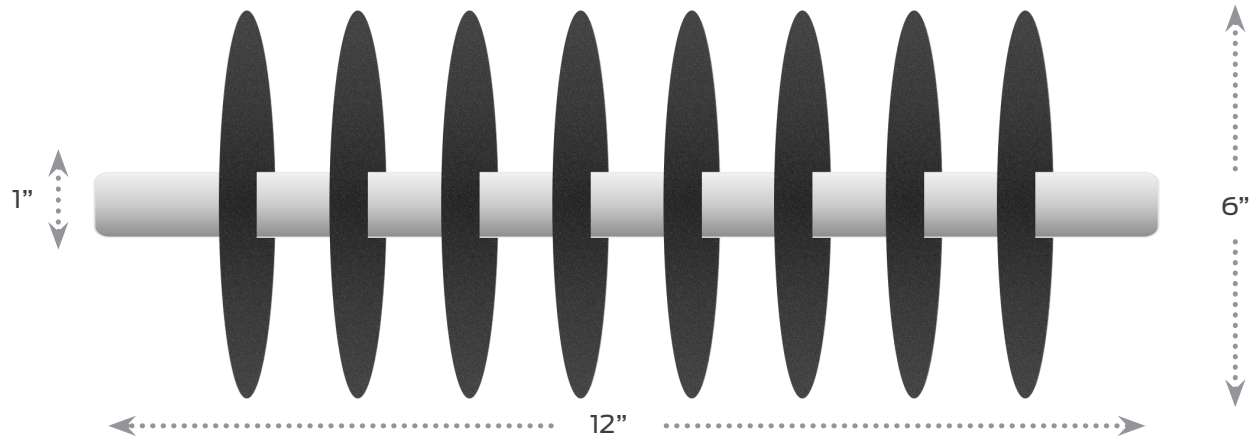

1 ½” OD X 12” L

SPECIFICATIONS

Holding Strength	500 ft-lb
Dirt Holding Capacity	16.0 lb-lft
Length Options	9", 12”, 24", 36"

Radial Magnetic Fields (12")	5
Radial Magnetic Field Diameter	7”
Magnetic Surface Area (12")	328.7 in^3

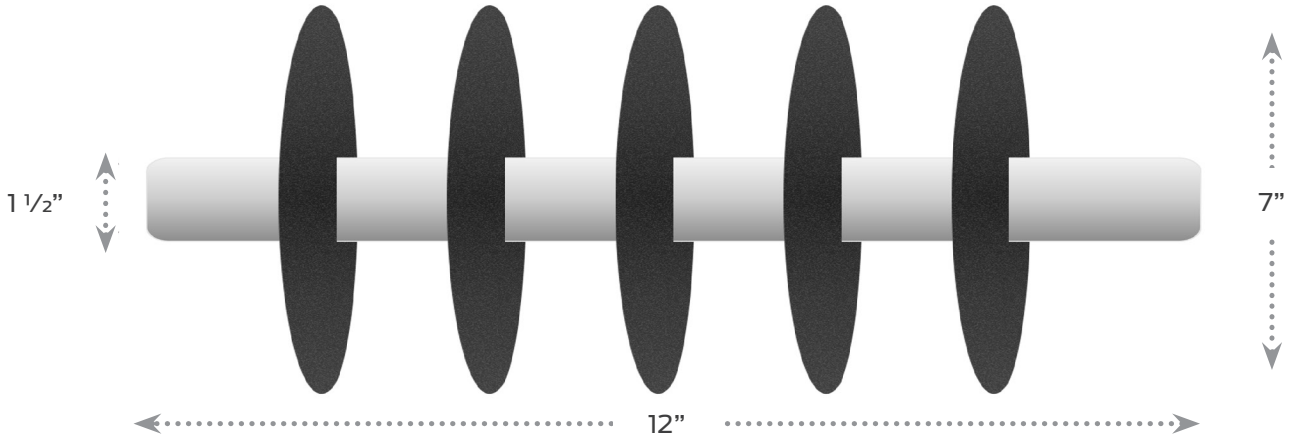

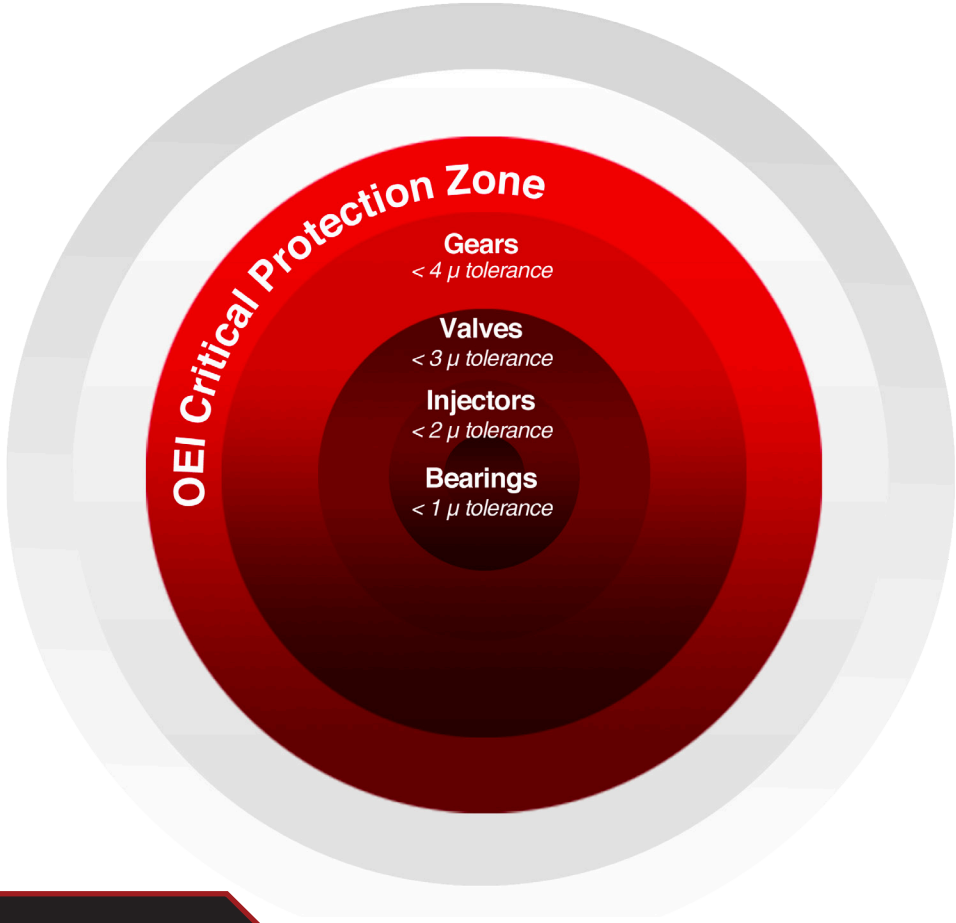

2” OD X 12” L

SPECIFICATIONS

Holding Strength	740 ft-lb
Dirt Holding Capacity	31.3 lb-lft
Length Options	9", 12”, 24", 36"

Radial Magnetic Fields (12")	5
Radial Magnetic Field Diameter	8”
Magnetic Surface Area (12")	420.9 in³

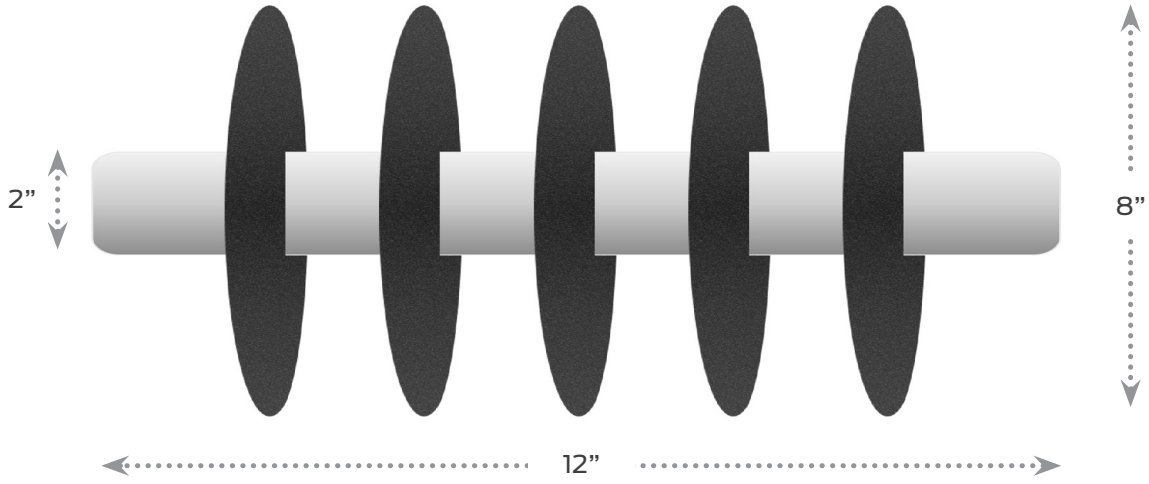

ORDERING

OEI DATA FORM

OEI magnetic filters are optimized for fluid viscosity, flow volume, flow rate, temperature, mobility, and mounting requirements. Use of the OEI Data Form will provide the necessary specifications for OEI to determine which product will provide optimal efficiency.
Inquire online at oneeyeindustries.com/order.

PROJECT INFORMATION

Project No.		Application	
Location		Fluid	
Client		Email	
Agent/Distributor		Phone	

PROBLEM / QUERY

TECHNICAL DATA

OPERATING DATA		
Operating Pressure		Unit
Operating Temp.		Unit
Max. Flow Rate		Unit
Viscosity		Unit
Liquid Density		Unit
Reservoir Size		Unit

DESIGN DATA		
Design Pressure		Unit
Design Temp.		Unit
Redundancy	Single-pass*	Multi-pass**

VESSEL CONNECTIONS		
	Size (in)	Port Type
Inlet		
Outlet		

ADDITIONAL INFORMATION & CROSS REFERENCES

*Single-pass: Fluid will pass through the magnetic filter once; ex. Transfer station.
**Multi-pass: Fluid will pass through the magnetic filter multiple times.

ALL PRODUCTS: OVERVIEW

One Eye Industries offers a series of products designed to help organizations achieve rapid payback with the lowest risk by extending the life of rotating equipment:

1 **ADD-VANTAGE 9000 SERIES**
The ADD-Vantage 9000 magnetic filtration system employs a magnetic element and a stainless steel cloth element in its design for high efficiency filtration and replaces conventional spin-on cartridge filters.

2 **SCRUBBER SERIES**
OEI Magnetic Filter Scrubbers employ an OEI Magnetic Filter Element in a special housing that ensures maximum dwell time for high efficiency filtration. These systems install on both suction and return lines of low and high pressure applications.

3 **Y-STRAINER SERIES**
OEI Magnetic Y-Strainers employ a magnetic filter element as a replacement of conventional Y-strainers. Designs with and without a screen are available.

4 **FILTER PLUG SERIES**
OEI Magnetic Filter Plugs employ rare-earth magnets and are the high quality replacement for OEM magnetic drain plugs. These filters are effective predictive maintenance tools when contamination is analyzed to determine component wear.

5 **MAGNETIC FILTER PAD SERIES**
OEI Magnetic Filter Pads enhance all spin-on filters by capturing the wear contamination (sludge) < 10 microns that disposable filters fail to remove. These filters extend fluid life by 2 - 3.

6 **EMERGENCY MAGNETIC PATCH**
The OEI Emergency Magnetic Patch provides an immediate, temporary solution to pipe wear or rupture by magnetically adhering to surfaces and preventing leakage. This patch helps to prevents unscheduled production.

7 **SPECIALTY EQUIPMENT DESIGNS**
OEI offers custom filters for OEM equipment applications such as chain cases, sump filters, transmission plates, pump jacks, and mud tanks. Other OEI specialty designs replace or enhance OEM conventional filters such as CAT, Komatsu, Parker, Schroeder or PALL.

8 **KIDNEY LOOP SYSTEM SERIES**
OEI Kidney Loop Systems are self-contained filtration units for offline filtration, fluid transfer of mobile or stationary equipment, and flushing of storage reservoirs. These systems employ multiple magnetic filters for filtration of wear contamination down to 4 microns and below.

SOLVING TOMORROW'S CHALLENGES, TODAY.

OneEyeIndustries.com
4344 12 Street SE
Calgary, AB T2G 3H9
Canada

403.242.4221
Quotes@OneEyeIndustries.com